845K8080
846K8080
845K9090
846K80BL
846K90BL

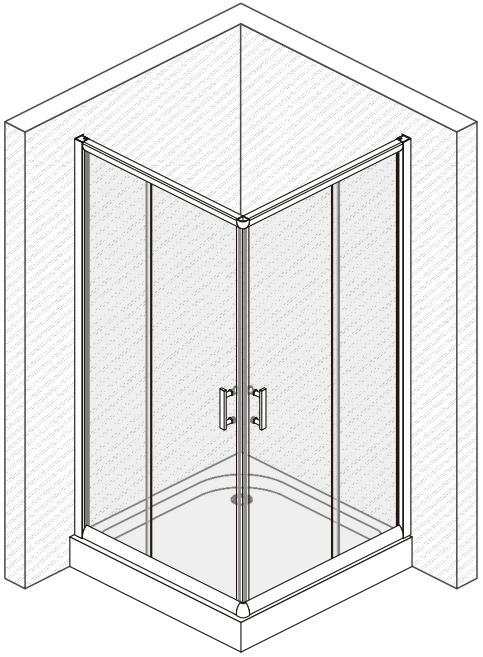

General Information

Please inspect the product immediately upon receipt for transit damage, missing packs/parts or manufacturing fault. Damage reported later cannot be accepted.
Please handle the product with care avoiding knocks and shock loading to all sides and edges of the glass.

Notes: Safety glass can not be re-worked.

Please read these instructions carefully before start of installation.
Special care should be taken when drilling walls to avoid hidden pipes or electrical cables.
Note: This products is heavy and may require two people to install

Aftercare instructions

After use, your shower should be cleaned with soap and water. This is particularly important in hard water districts where insoluble lime salts may be deposited and allowed to build up. Cleaners of a gritty or abrasive nature should not be used.
Care should be taken to avoid contact with strong chemicals such as organic solvents and strippers.
Glass cleaners can be used but with caution, if in doubt contact the manufacturer of the cleaner in question.
Please keep these instructions for aftercare and customer service details.

Tools Required

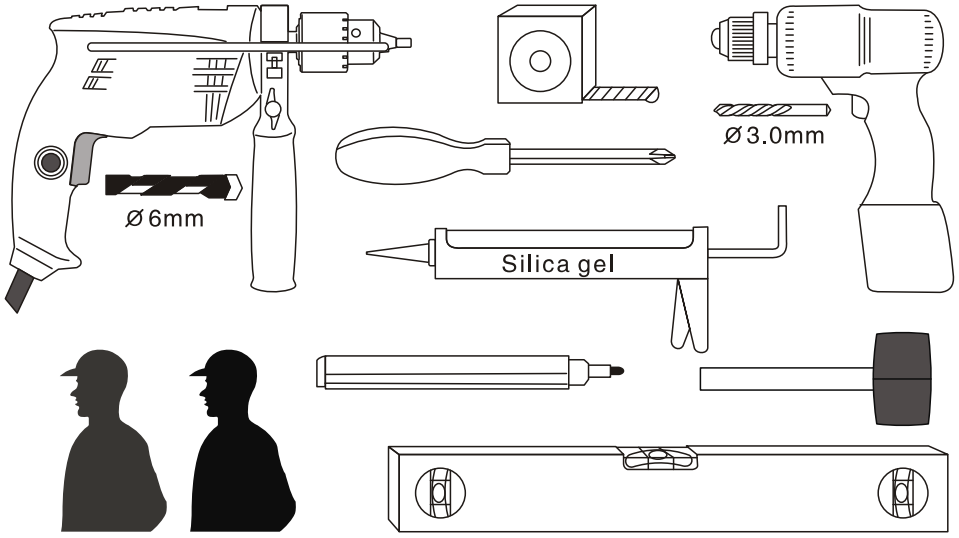

This product is heavy and may require two people to install.

8.

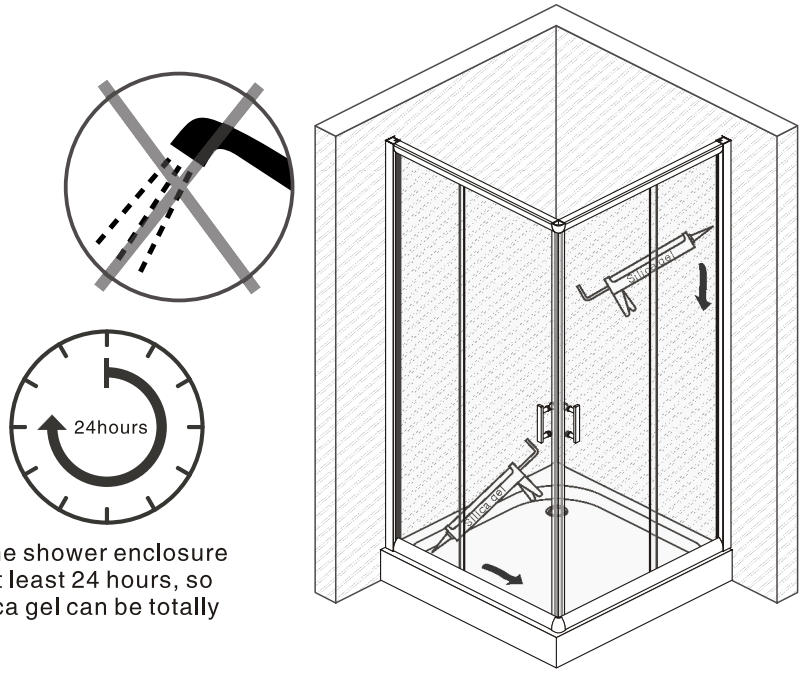

Warning:
Don't use the shower enclosure until after at least 24 hours, so that the silica gel can be totally dry.

6.

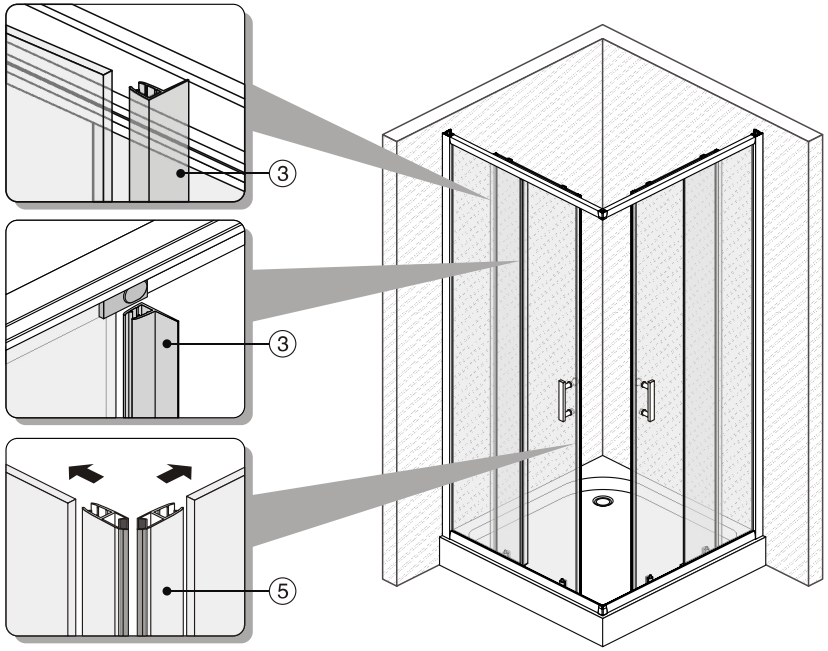

7.

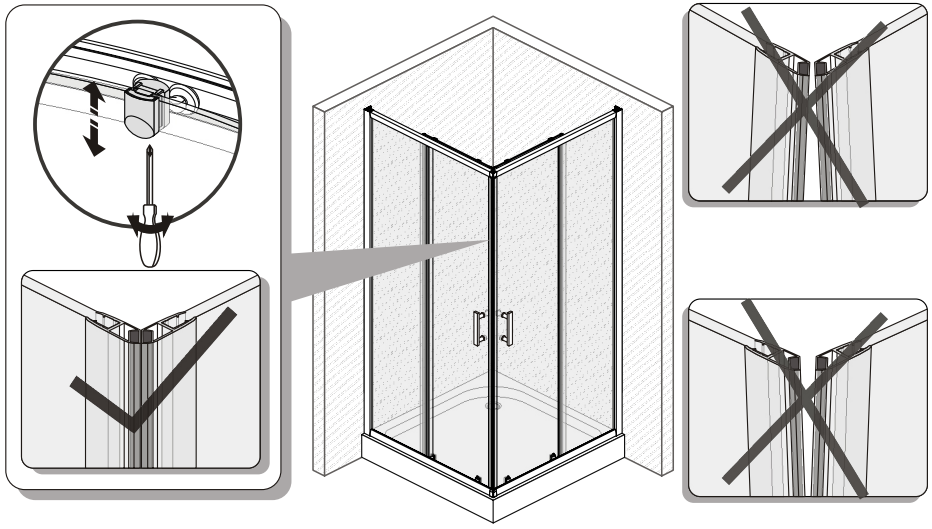

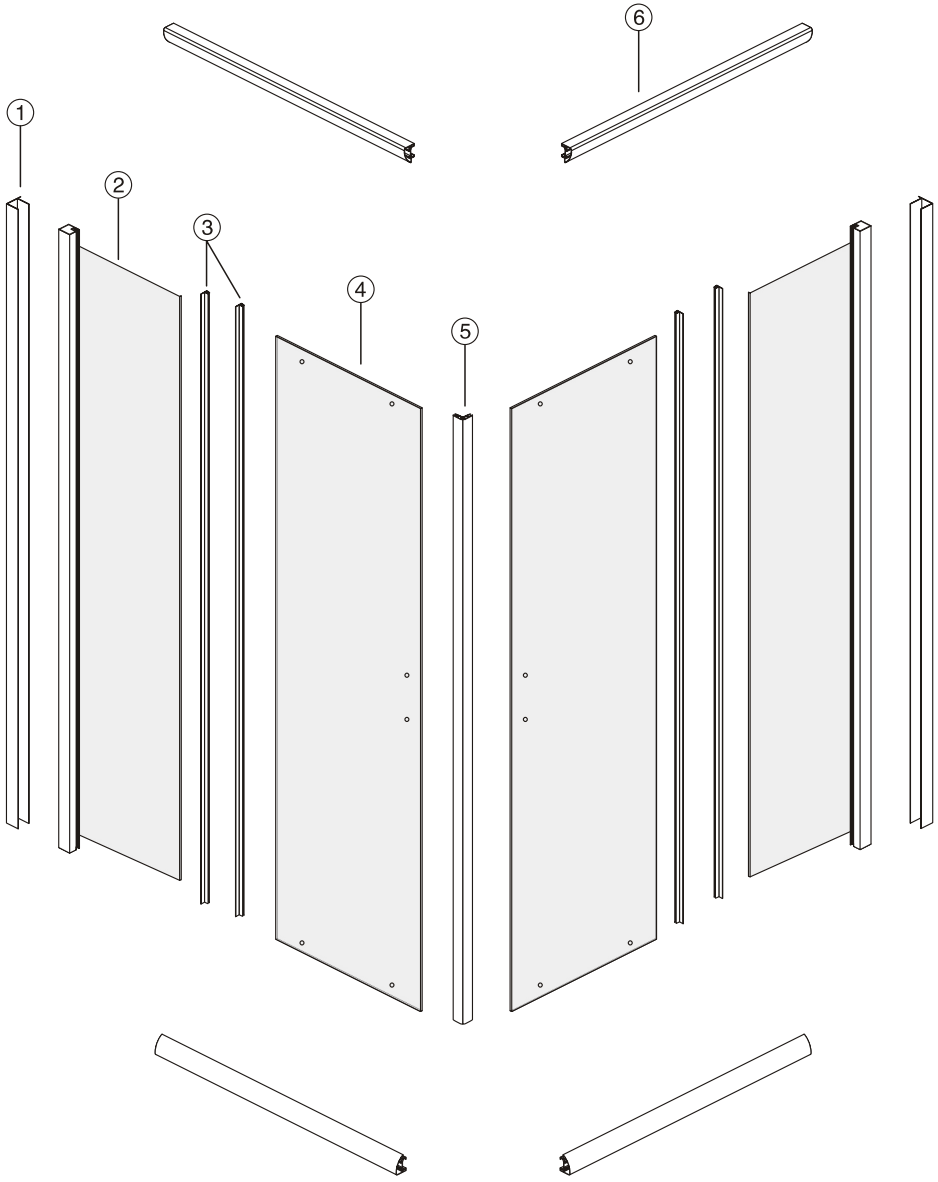

⑦	Ø6mm	x8	⑭		x4
⑧	Ø4*30mm	x8	⑮		x4
⑨	Ø4*10mm	x16	⑯		x2
⑩	Ø4*20mm	x8	⑰		x4
⑪	M4*8mm	x4	⑱		x8
⑫		x16	⑲		
⑬		x2	⑳		

5.

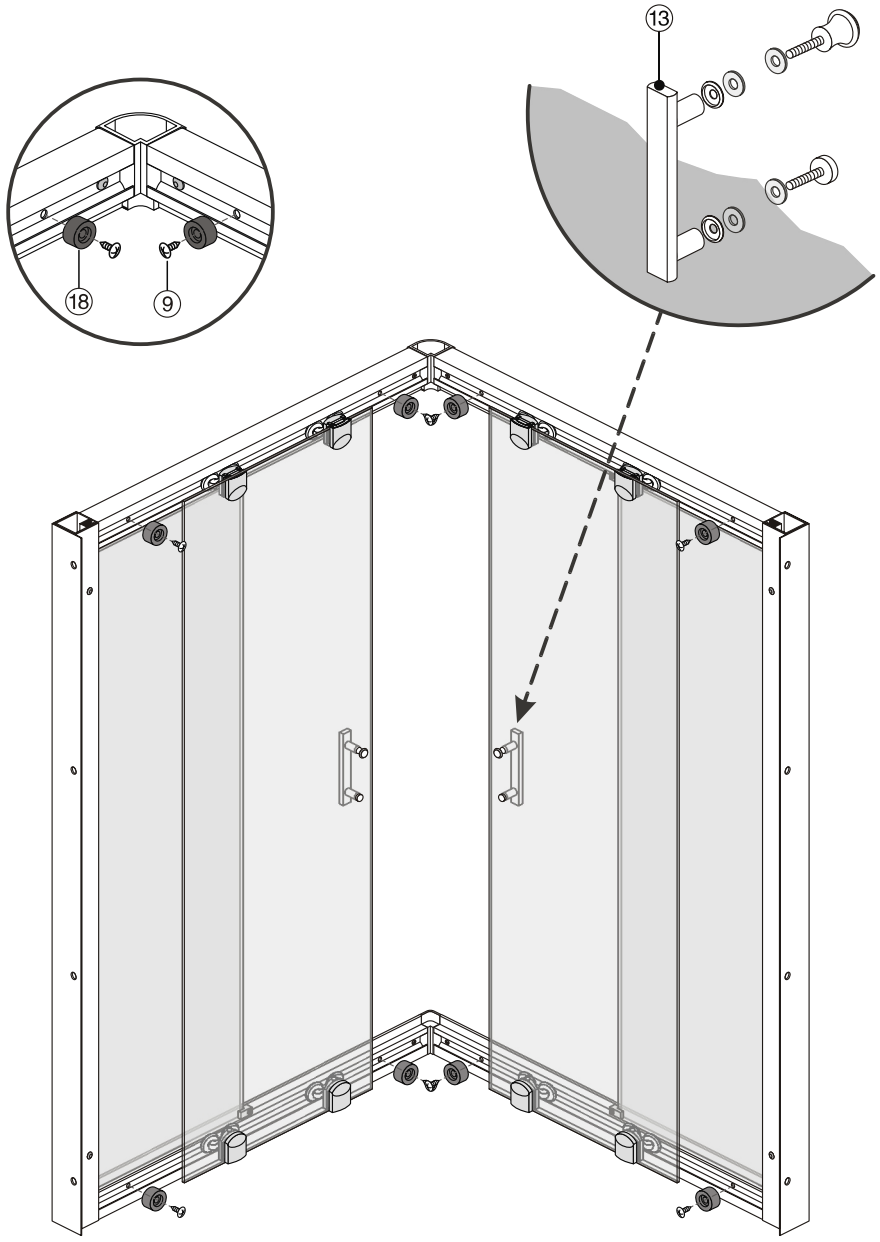

4.

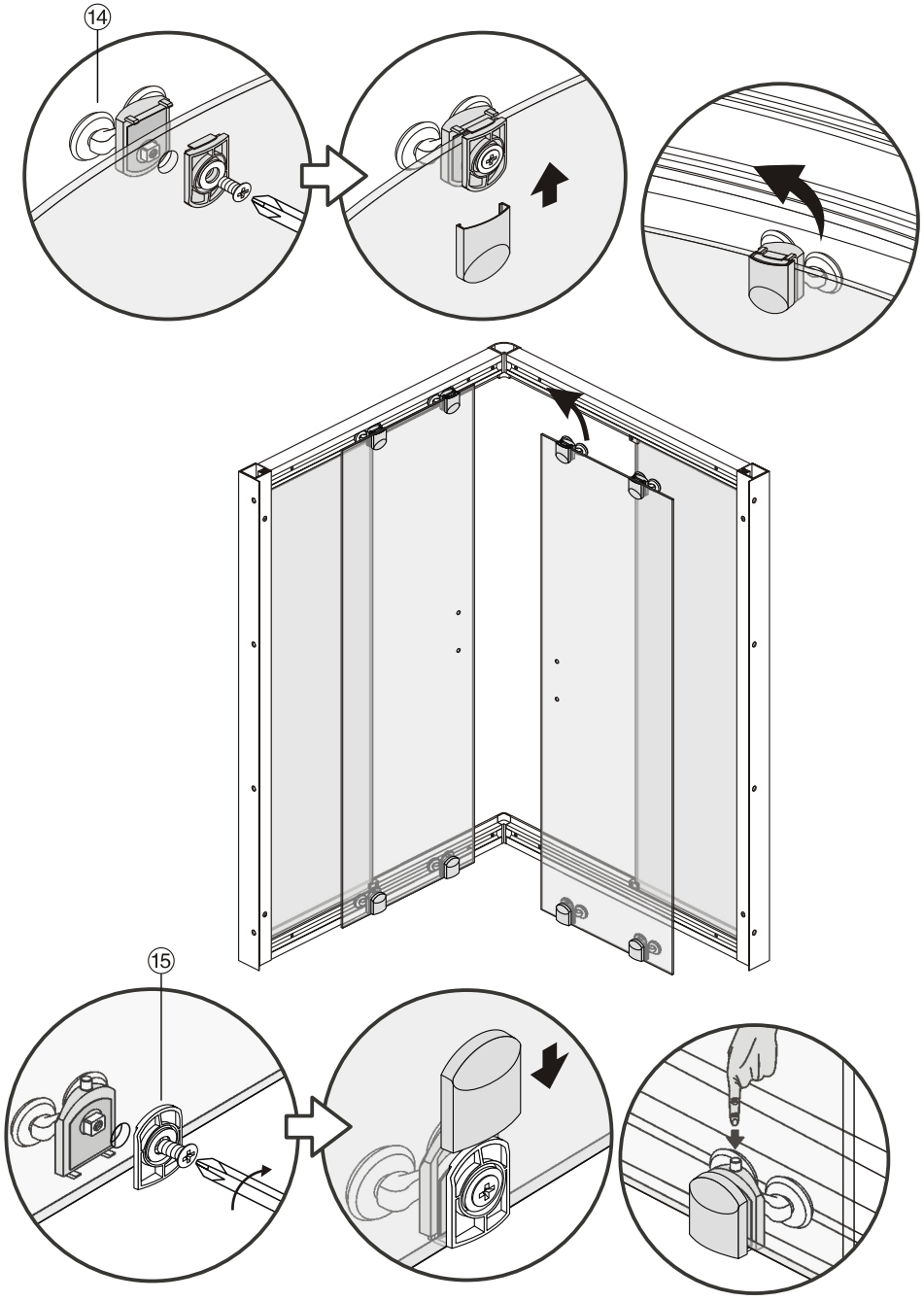

1.

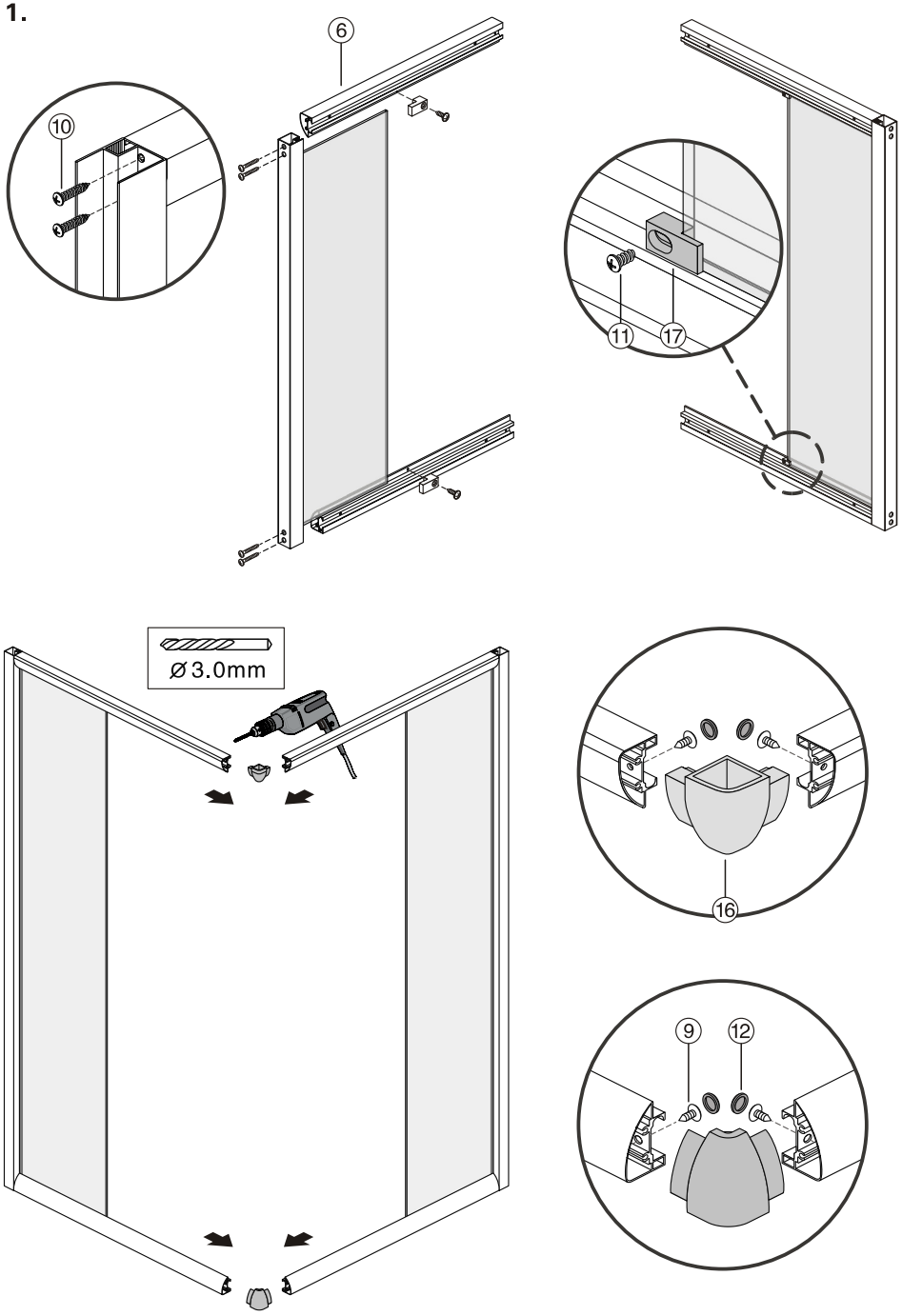

2.

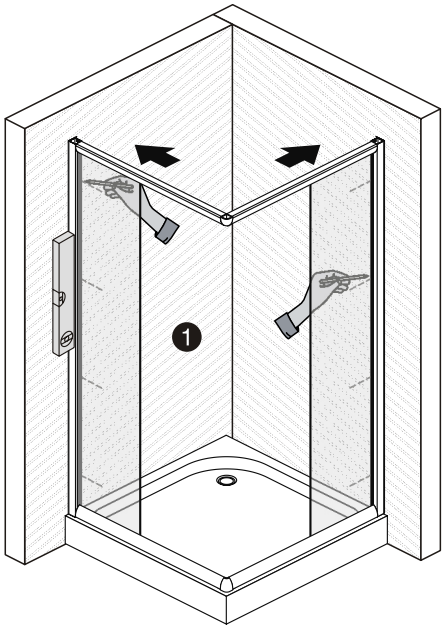

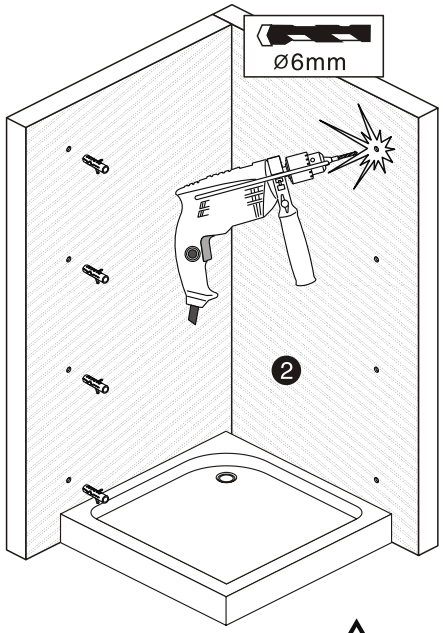

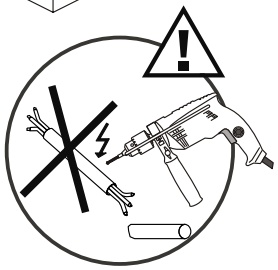

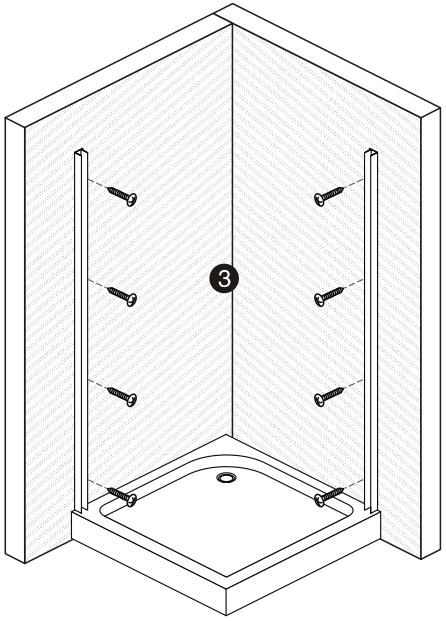

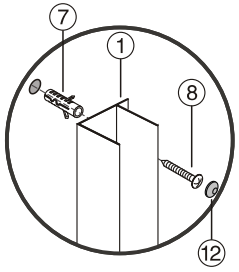
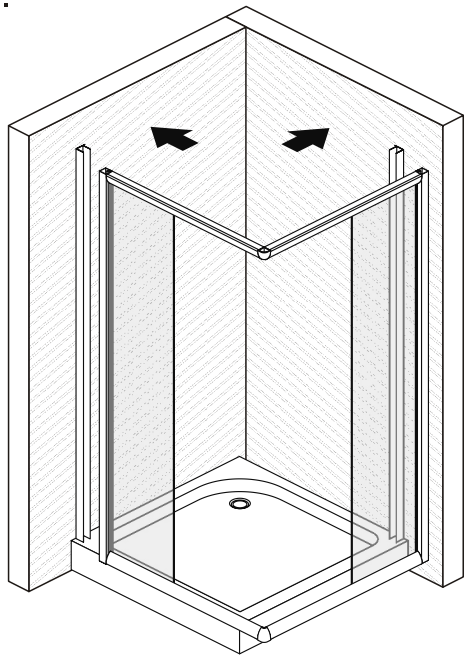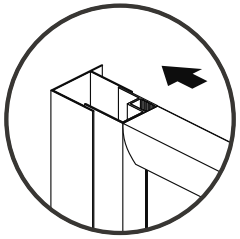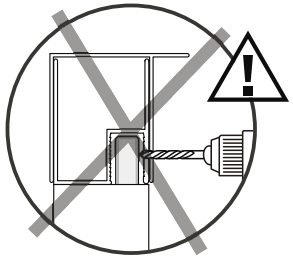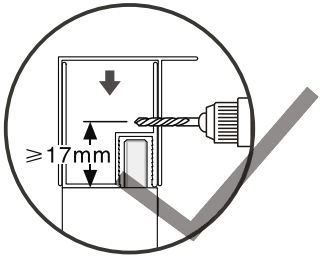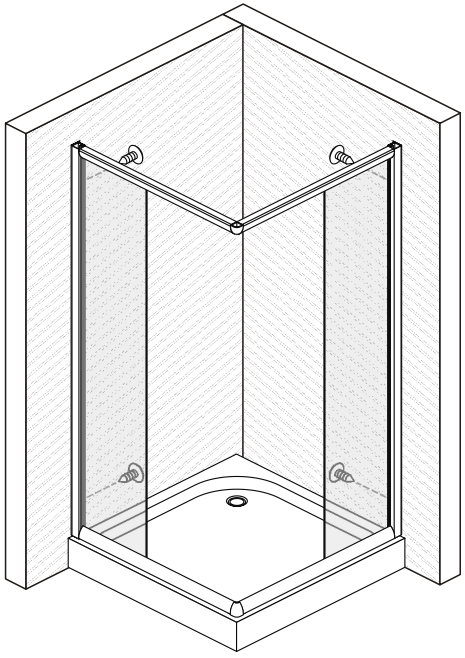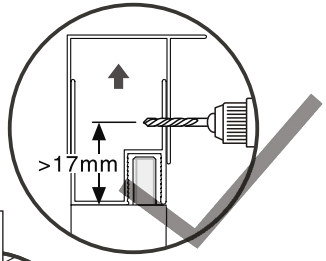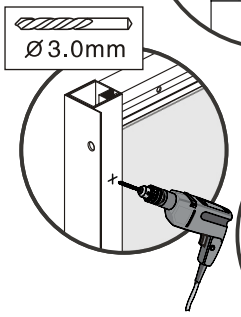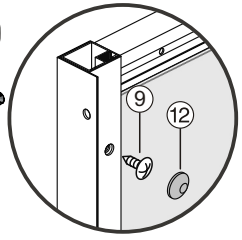
3.